Technical Sheet

teacherTAXI® Cart

- 204A001, teacherTAXI Cart, 85 lb (39 kg)
- Frame is Silver powder-coat paint finish
- Three large one piece blow molded polyethylene shelves that have an easy to clean skid resistant texture
  - 42"l x 22-3/4"w (1067 x 578 mm) overall dimensions
  - Shelf weight load capacity: 100 lb (45 kg) per shelf
  - Available in Black only
- Ideal for transporting instrument cases, keyboards, etc
- Top transport storage rim keeps instrument cases, keyboards, etc. from falling off
- Ergonomically designed
  - Top work surface at ergonomic height
  - Handle position and design avoids stress
- Fits through standard doorways, hallways and elevators
- 1-1/2" (38 mm) diameter curved steel tubular frame provide strength and attractive design
- Built-in pencil and marker tray on all shelves
- Center shelf adjusts in seven positions and can be removed
- Includes cup holders (set of two): one large and one small (large 3-1/2" ID; small 2-3/4" ID)
- Water resistant
- Ten-year warranty
- Shipped assembled

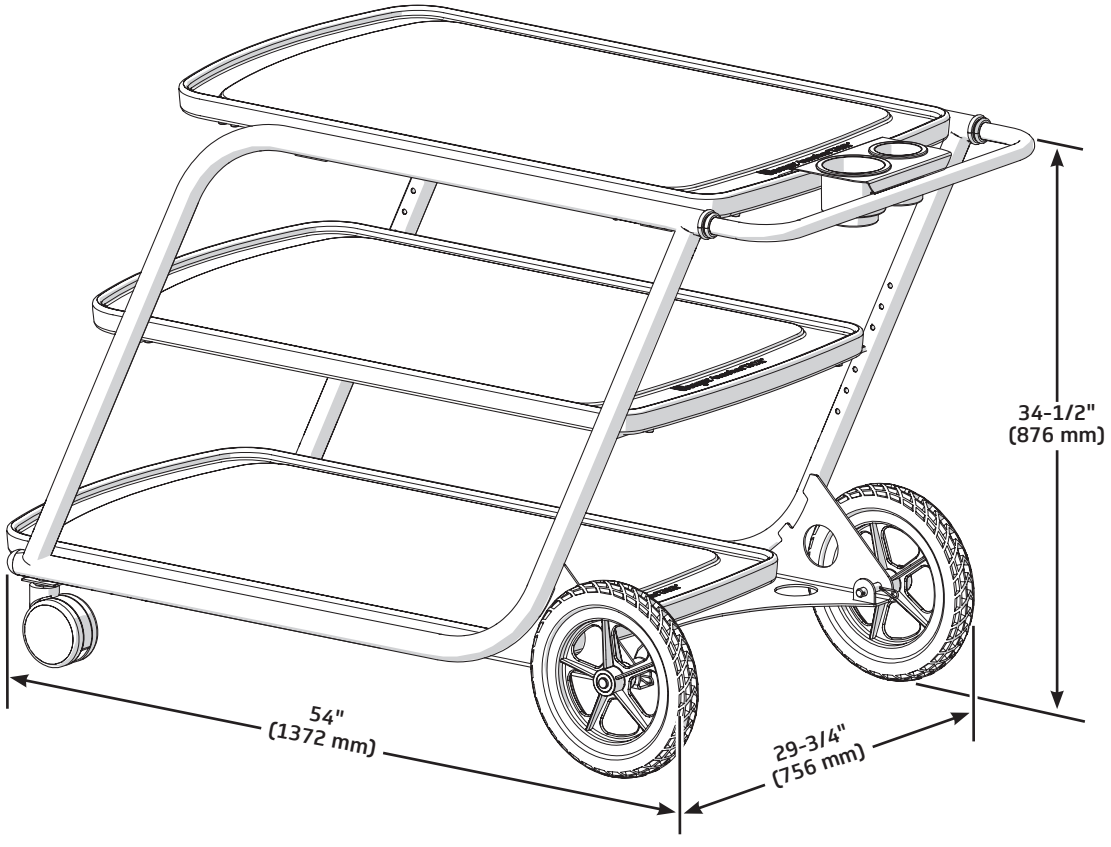

Accessories

- Lockable storage drawer for laptop computers, purses, etc:
  - Inside dimension: 24-1/2"l x 11"w x 6-3/4"d (622 x 280 x 171 mm)
  Overall dimension: 26"l x 13"w x 7"d (660 x 330 x 178 mm)
- Pullout work surface for teaching or laptop use: surface dimension 12"d x 19-1/2"w (305 x 495 mm)
- 15A/6 outlet, UL Approved power strip with a 10' (3048 mm) cord

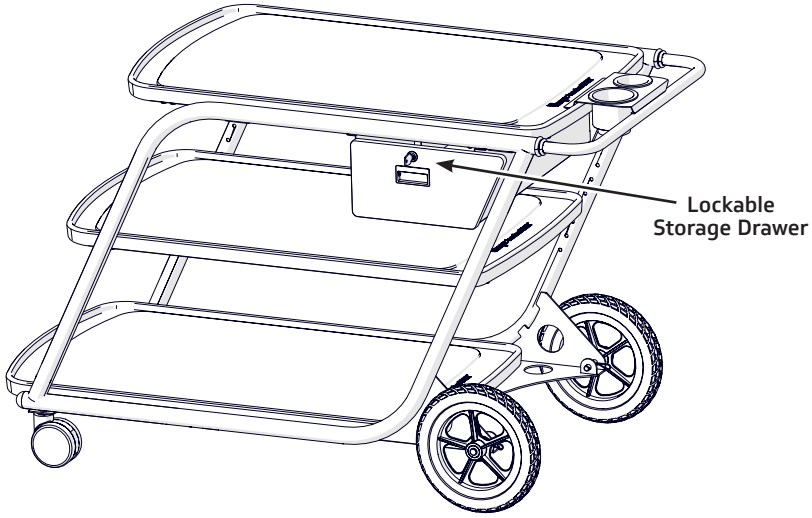

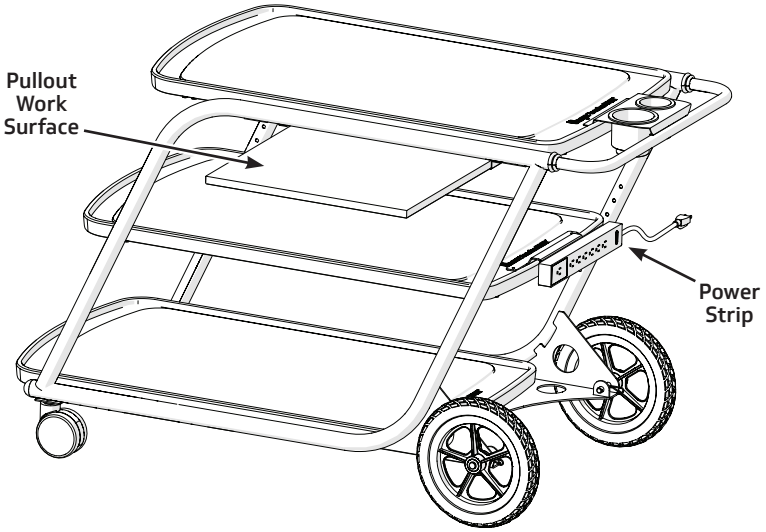

Wenger®
CORPORATION

© 2026 Wenger Corporation
USA/2026-10

Minnesota Location Wenger Phone 800.4WENGER (493-6437) Wenger Worldwide +1.507.455.4100 | Parts & Service 800.887.7145 | wengercorp.com
GearBoss Phone 800.493.6437 | gearboss.com
555 Park Dr, PO Box 448 | Owatonna, MN 55060
New York Location J.R. Clancy Phone 800.836.1885 JR Clancy Worldwide +1.315.451.3440 | jrclancy.com | 7041 Interstate Island Rd | Syracuse, NY 13209
Rhode Island Location Creative Conners Phone 401.289.2942 | creativeconners.com | 20 Avery Rd | Cranston, RI 02910
Texas Location Texas Scenic Company Phone 210.684.0091 | texasscenic.com | 8053 Potranco Rd | San Antonio, TX 78251