Assembly Instructions

Adjustable Height Stairway
3-Step, 4-Step, 6-Step and 8-Step

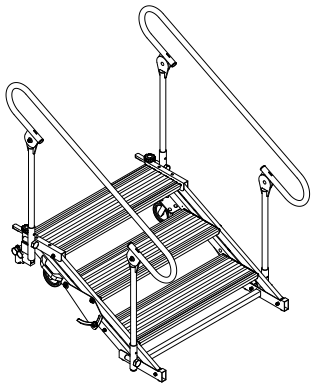

3-Step
Adjustable Height Stairway

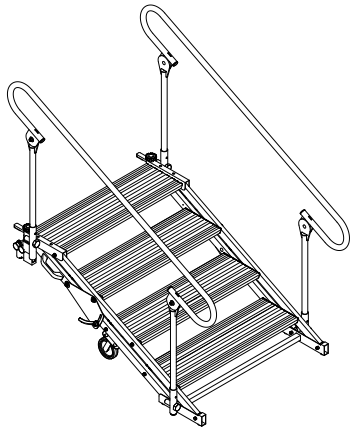

4-Step
Adjustable Height Stairway

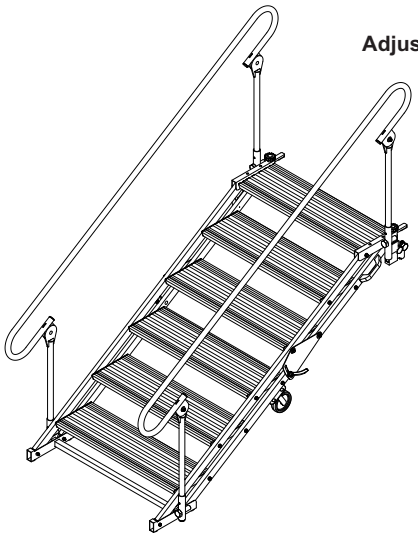

6-Step
Adjustable Height Stairway

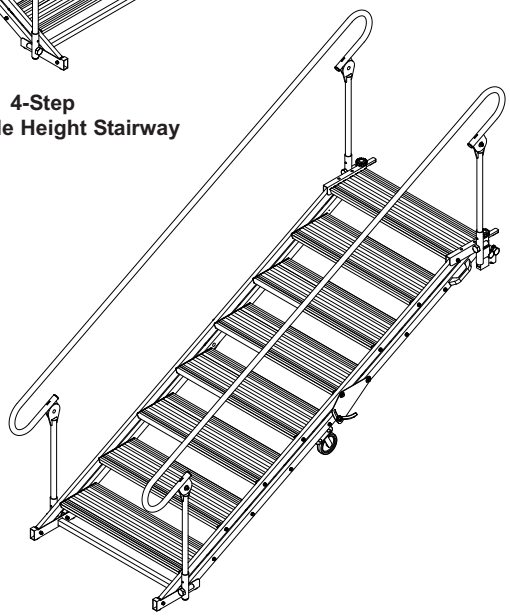

8-Step
Adjustable Height Stairway

CONTENTS

Important User Information 2
General 2
Manufacturer 2
Intended Use 2
Warranty 2
Required Tools 3
Fasteners 3
Parts List 4
Assembly 6
Installation and Use 15
Deck Connect Orientation 16

Note: Please read and understand these instructions before assembling the parts.

Note: Remove all items from the shipping cartons and arrange them in a convenient location. Refer to the illustrations on the following pages. If you need additional information, contact the Wenger Corporation using the information below.

Note: These Adjustable Height Stairways may be used with a variety of platform systems, contact the Wenger Corporation to verify compatability.

©Wenger Corporation 2013
Printed in USA 04/13 Part #281A275-01

Wenger Corporation, 555 Park Drive, P.O. Box 448, Owatonna, Minnesota 55060-0448
Questions? Call.....USA: 800-4WENGER (493-6437) • Worldwide: 1-507-455-4100 • www.wengercorp.com

Important User Information

General

Copyright © 2013 by Wenger Corporation

All rights reserved. No part of the contents of this manual may be reproduced, copied, or transmitted in any form or by any means including graphic, electronic, or mechanical methods or photocopying, recording, or information storage and retrieval systems without the written permission of the publisher, unless it is for the purchaser's personal use.

Printed and bound in the United States of America.

The information in this manual is subject to change without notice and does not represent a commitment on the part of Wenger Corporation. Wenger Corporation does not assume any responsibility for any errors that may appear in this manual.

In no event will Wenger Corporation be liable for technical or editorial omissions made herein, nor for direct, indirect, special, incidental, or consequential damages resulting from the use or defect of this manual.

The information in this document is not intended to cover all possible conditions and situations that might occur. The end user must exercise caution and common sense when assembling or installing Wenger Corporation products. If any questions or problems arise, call Wenger Corporation at 1-800-733-0393.

Manufacturer

The Adjustable Height Stairway is manufactured by:

Wenger Corporation
555 Park Drive
Owatonna, MN 55060
1-800-4WENGER (493-6437) • 1-507-455-4100
www.wengercorp.com

Intended Use

- This product is intended for indoor use in normal ambient temperature and humidity conditions — it must not be exposed to prolonged outside weather conditions.
- This product is intended to be assembled only as described in these instructions.

Warranty

This product is guaranteed free of defects in materials and workmanship for five full years from date of shipment. A full warranty statement is available upon request.

Required Tools

- 5/16”, 1/4" and 3/8” Socket Wrenches or Open End/Box End Wrenches
- Phillips Head Screwdriver
- Impact Driver with a 9/16” Socket

Fasteners

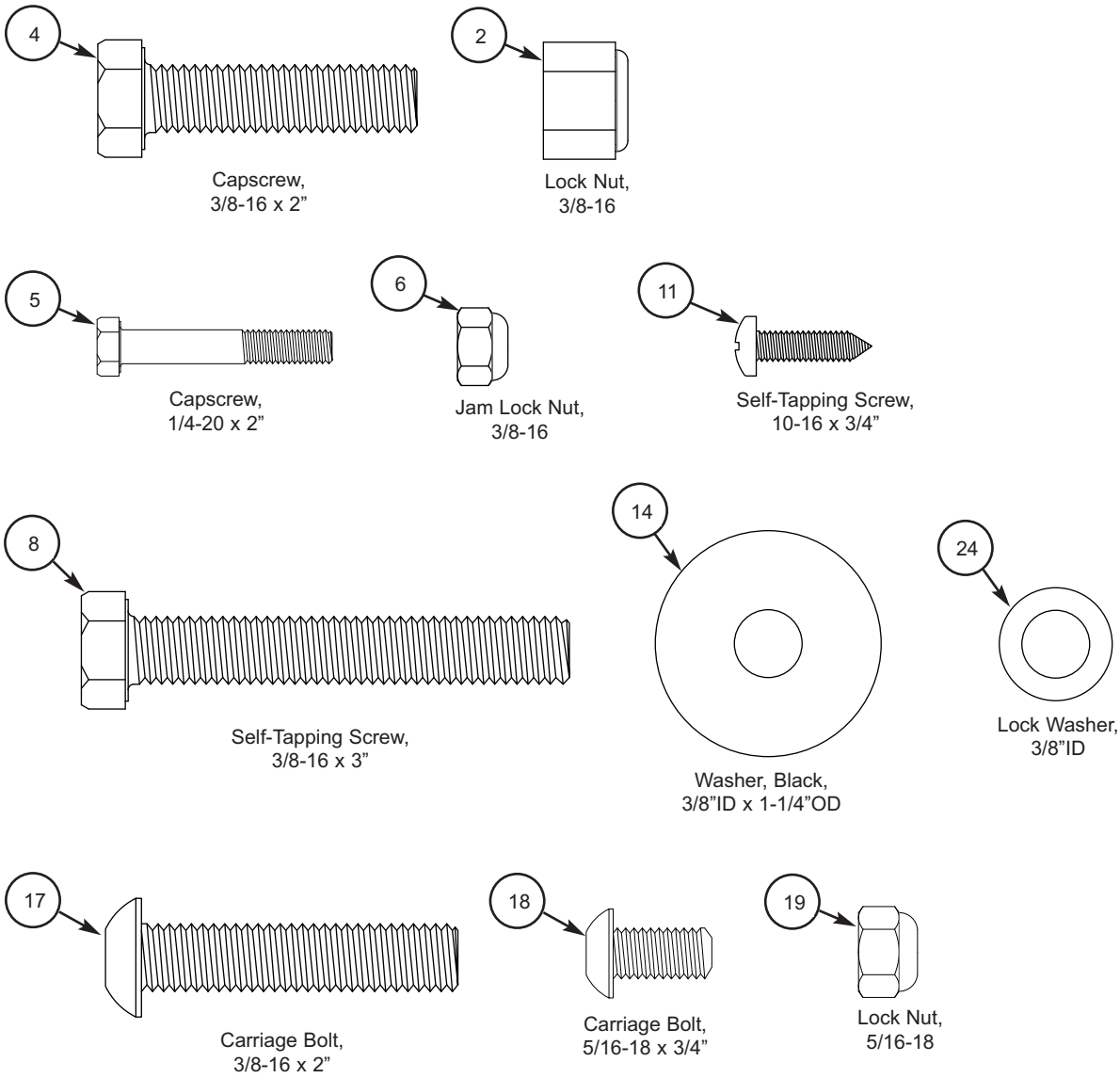

Parts List

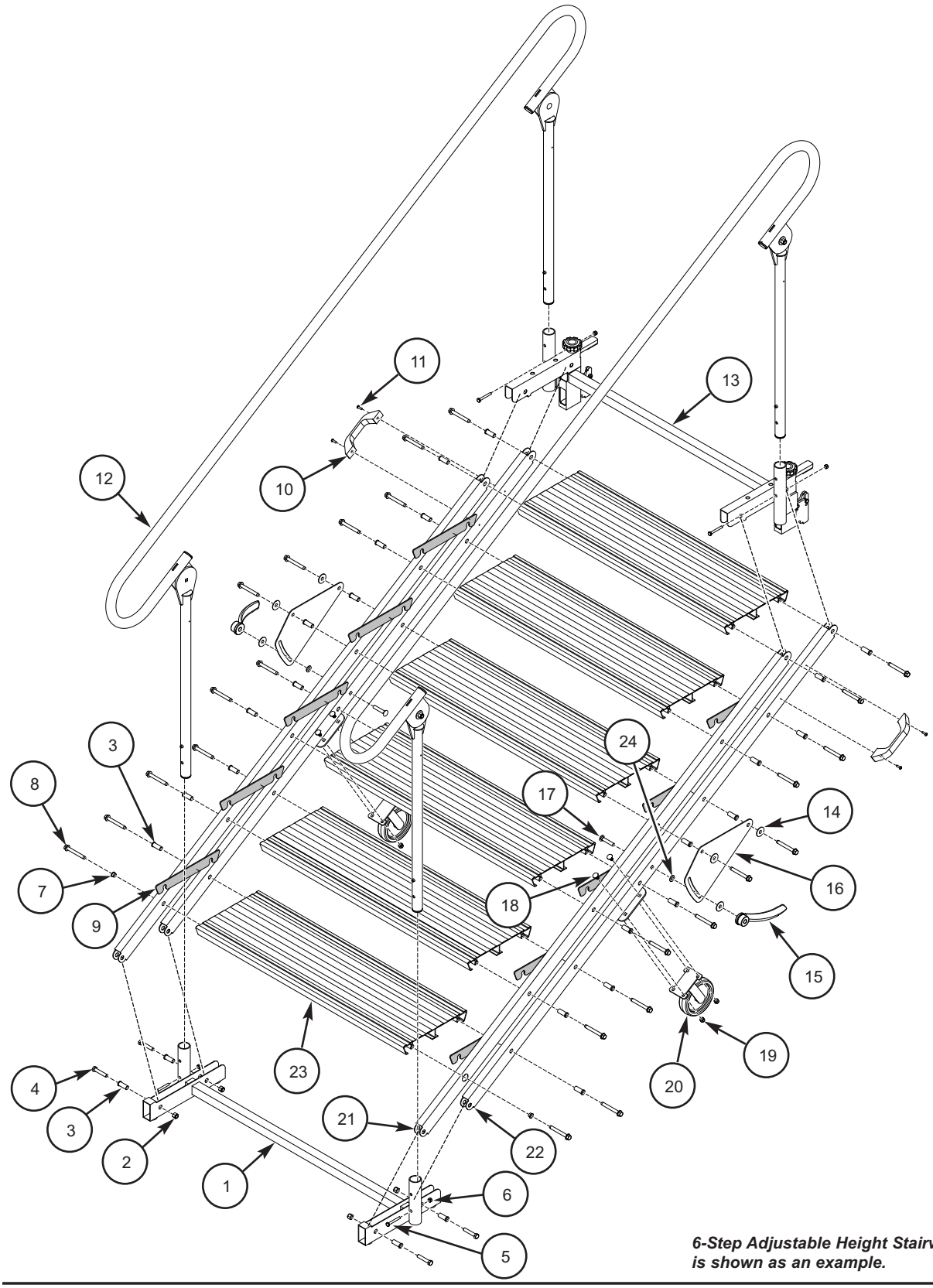

6-Step Adjustable Height Stairway is shown as an example.

Parts List (continued)

Item	Qty 3-Step	Qty 4-Step	Qty 6-Step	Qty 8-Step	Description
1	1	1	1	1	Base Assembly
2	4	4	4	4	Lock Nut, 3/8-16
3	14	18	26	34	Flange Bearing, 3/8”OD x 1/2”ID x 1-1/4”
4	4	4	4	4	Capscrew, 3/8-16 x 2”
5	4	4	4	4	Capscrew, 1/4-20 x 2”
6	4	4	4	4	Jam Lock Nut, 3/8-16
7	2	2	2	2	Flange Bearing, 3/8”OD x 1/2”ID x 1/4”
8	12	16	24	32	Self-Tapping Screw, 3/8-16 x 3”
9	4	6	10	14	Cover Plate
10	2	2	2	2	Handle
11	4	4	4	4	Self-Tapping Screw, 10-16 x 3/4”
12	2	2	2	2	Rail Assembly
13	1	1	1	1	Deck Connect Assembly
14	6	6	6	6	Washer, Black, 3/8”ID x 1-1/4”OD
15	2	2	2	2	Side Adjustment Handle
16	2	2	2	2	Pivot Plate
17	2	2	2	2	Carriage Bolt, 3/8-16 x 2”
18	8	8	8	8	Carriage Bolt, 5/16-18 x 3/4”
19	8	8	8	8	Lock Nut, 5/16-18
20	2	2	2	2	Caster
21	2	2	2	2	Upper Stringer
22	2	2	2	2	Lower Stringer
23	3	4	6	8	Step Tread
24	2	2	2	2	Lock Washer, 3/8”ID

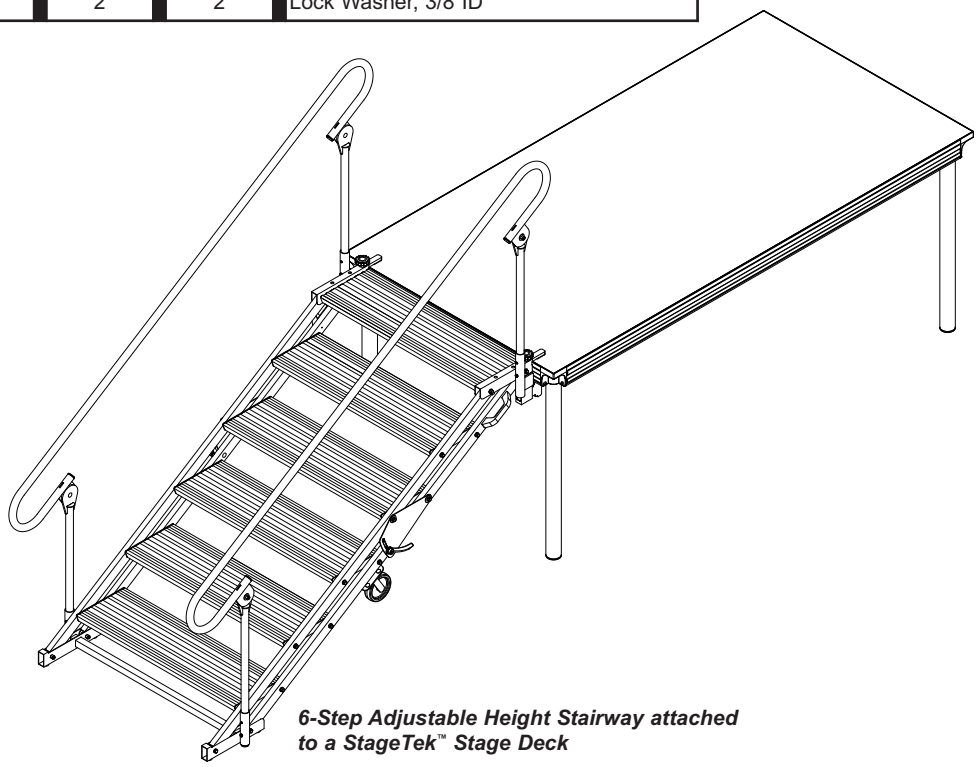

6-Step Adjustable Height Stairway attached to a StageTek™ Stage Deck

ASSEMBLY

⚠ CAUTION

Make sure anyone assembling or installing the StageTek component has read and understands the instructions.

⚠ CAUTION

Always comply with Warnings or Cautions in the instructions or posted on the equipment.

IMPORTANT: ***The stage deck elevation must fall within the height range of the Adjustable Height Stairway model being assembled.***

Adjustable Stairway Model	Minimum Height	Maximum Height
3-Step	12”	24”
4-Step	16”	32”
6-Step	24”	48”
8-Step	32”	64”

1. Attach one Caster (20) to both of the Lower Stringers (22) using four 5/16-18 x 3/4” Carriage Bolts (18) and four 5/16-18 Lock Nuts (19) as shown.

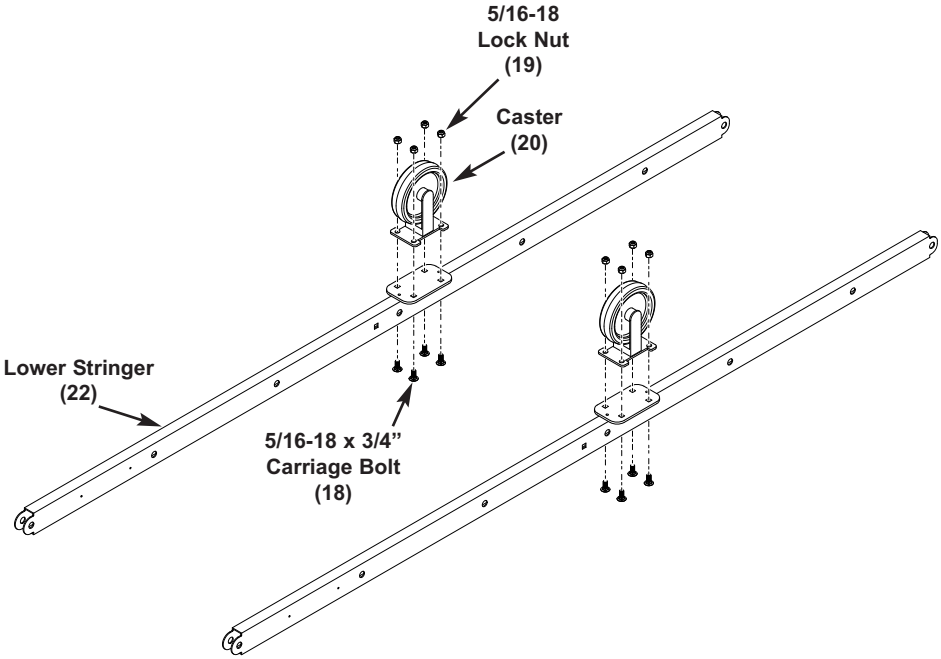

6-Step Model shown as an example.

Assembly (continued)

2. Attach one Handle (10) to the outside of each Lower Stringer Assembly using two 10-16 x 3/4” Self-Tapping Screws (11) as shown.

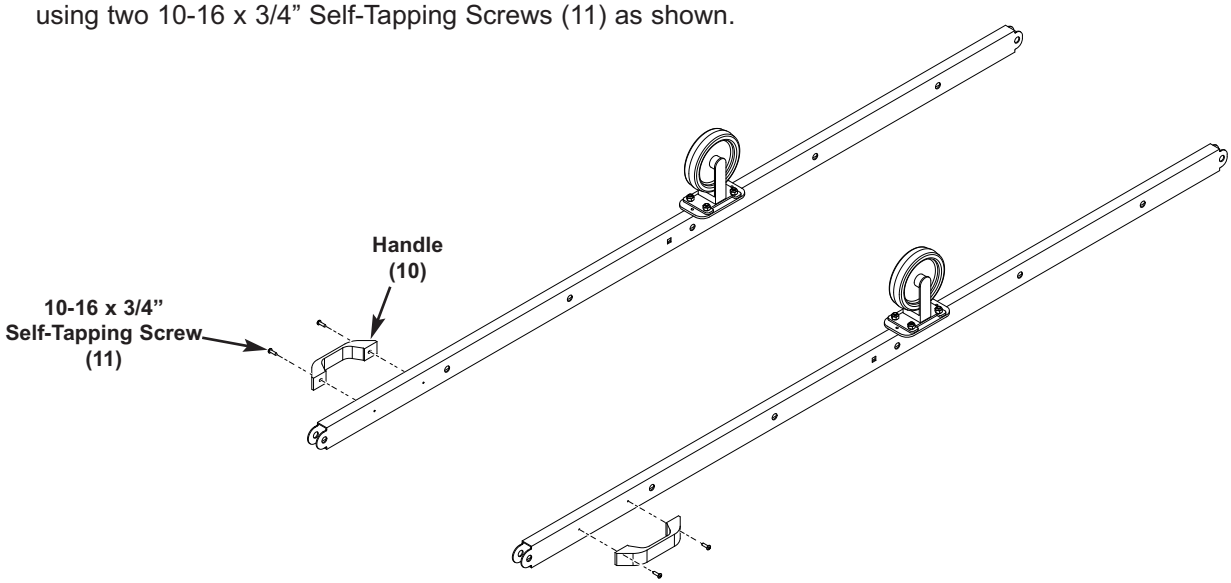

3. Attach the Deck Connect Assembly (13) to the stage deck.
   These instructions are for assembling on a StageTek stage deck.
   If assembling on a different Wenger stage deck ,see “Deck Connect Orientation” on page 16 before proceeding.
   a. Be sure that both Connect Brackets are open. This can be adjusted by turning the Handle.
   b. Lift the Adjustable Stairway Connect Brackets to fit over the lip of the stage deck and to rest on the stage deck as shown.
   c. Tighten the Handle on both Connect Brackets to secure it into place.

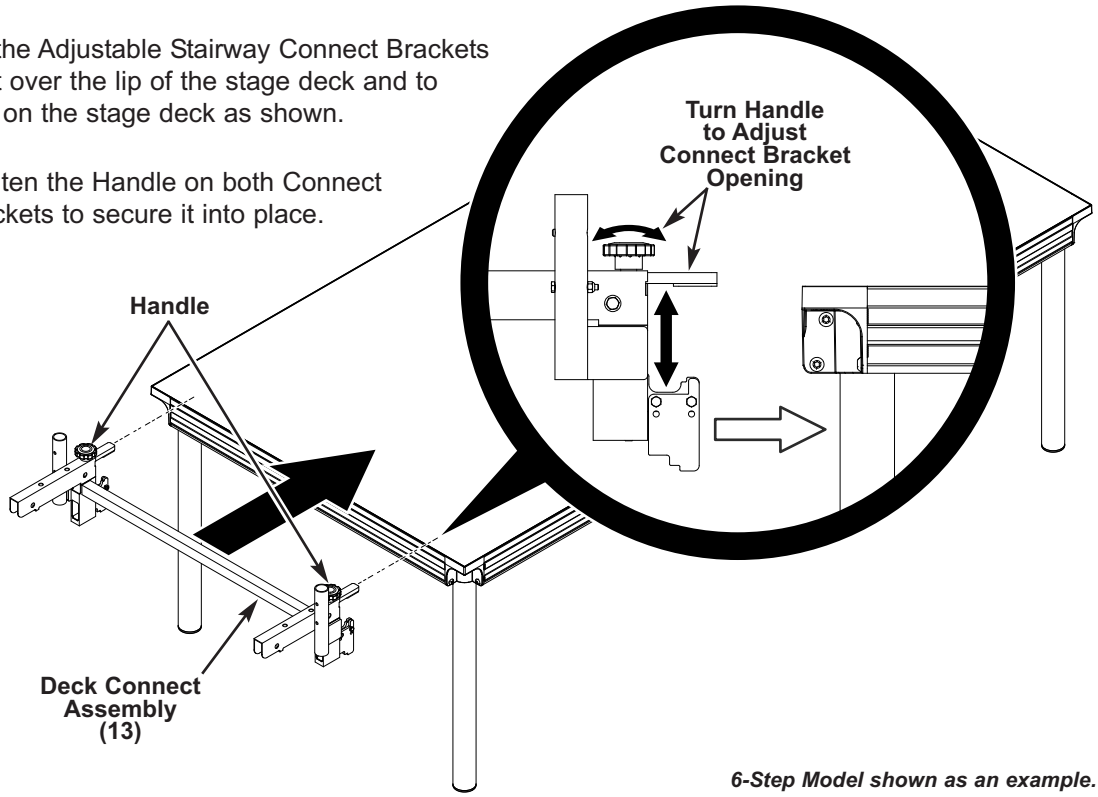

6-Step Model shown as an example.

Assembly (continued)

4. Attach the Lower Stringer Assemblies.
   a. Place the Base Assembly (1) on the ground in front of the Deck Connect Assembly.
   b. With the Handle at the outside top, fit both of the Lower Stringer Assemblies into the channels of the Deck Connect Assembly to align the holes as shown.
   c. Lower the other end of the Lower Stringer Assemblies to align with the Base Assembly as shown.
   d. Attach each Lower Stringer Assembly to the Base Assembly using one 3/8-16 x 2" Capscrew (4), one 1/2"OD x .3/8"ID x 1-1/4" Flange Bearing (3) and one 3/8-16 Lock Nut (2) as shown.

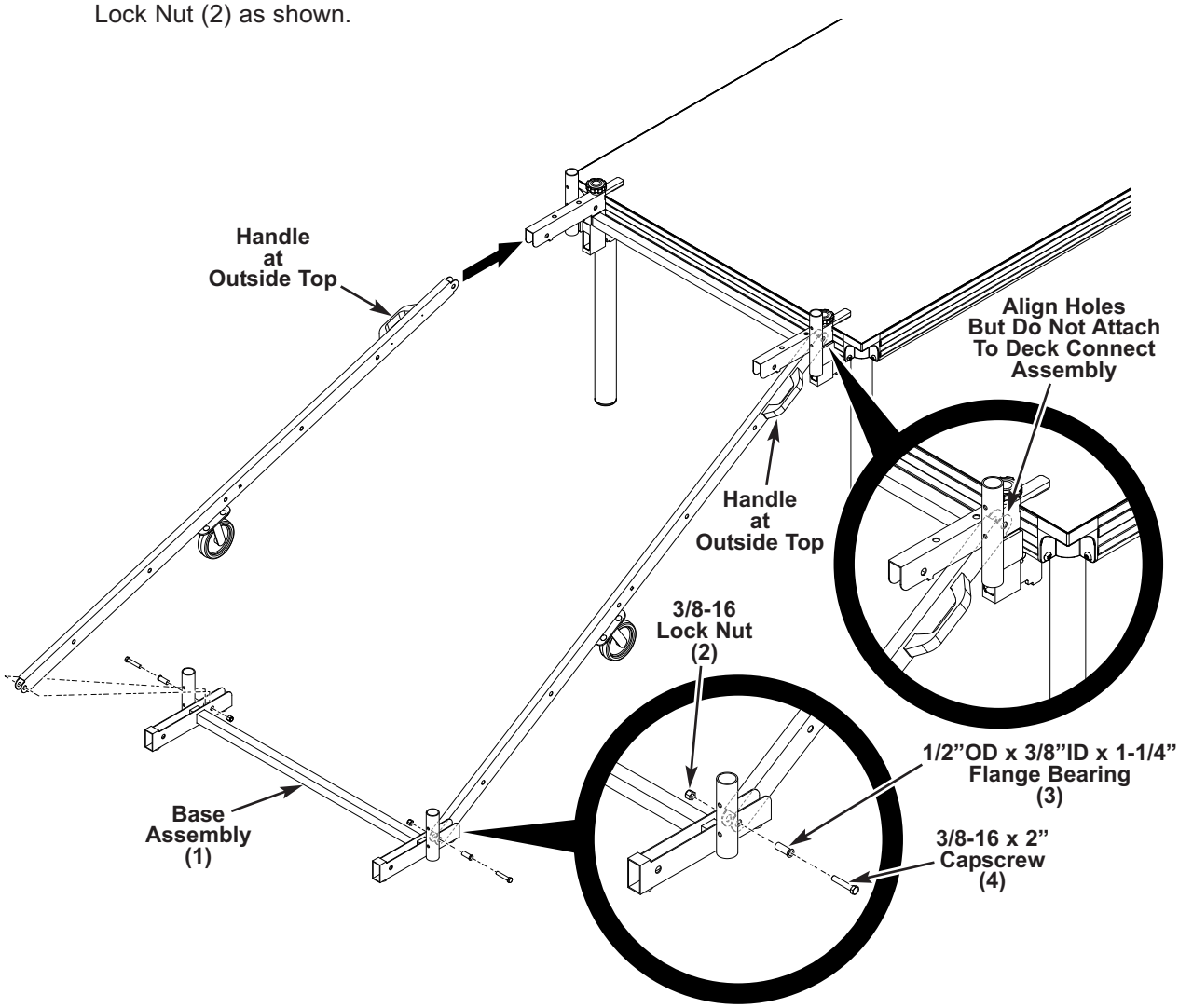

6-Step Model shown as an example.

Assembly (continued)

5. Attach the Upper Stringers (21).
   a. With the larger hole facing out, fit both of the Upper Stringers into the channels of the Deck Connect Assembly to align the holes as shown.

   b. Lower the other end of the Upper Stringers to align with the Base Assembly as shown. The Base Assembly may need to be tilted upward to fit the bottom of each Upper Stringer.

   d. Attach each Upper Stringer to the Base Assembly (1) using one 3/8-16 x 2” Capscrew (4), one 1/2”OD x .3/8”ID x 1-1/4” Flange Bearing (3) and one 3/8-16 Lock Nut (2) as shown.

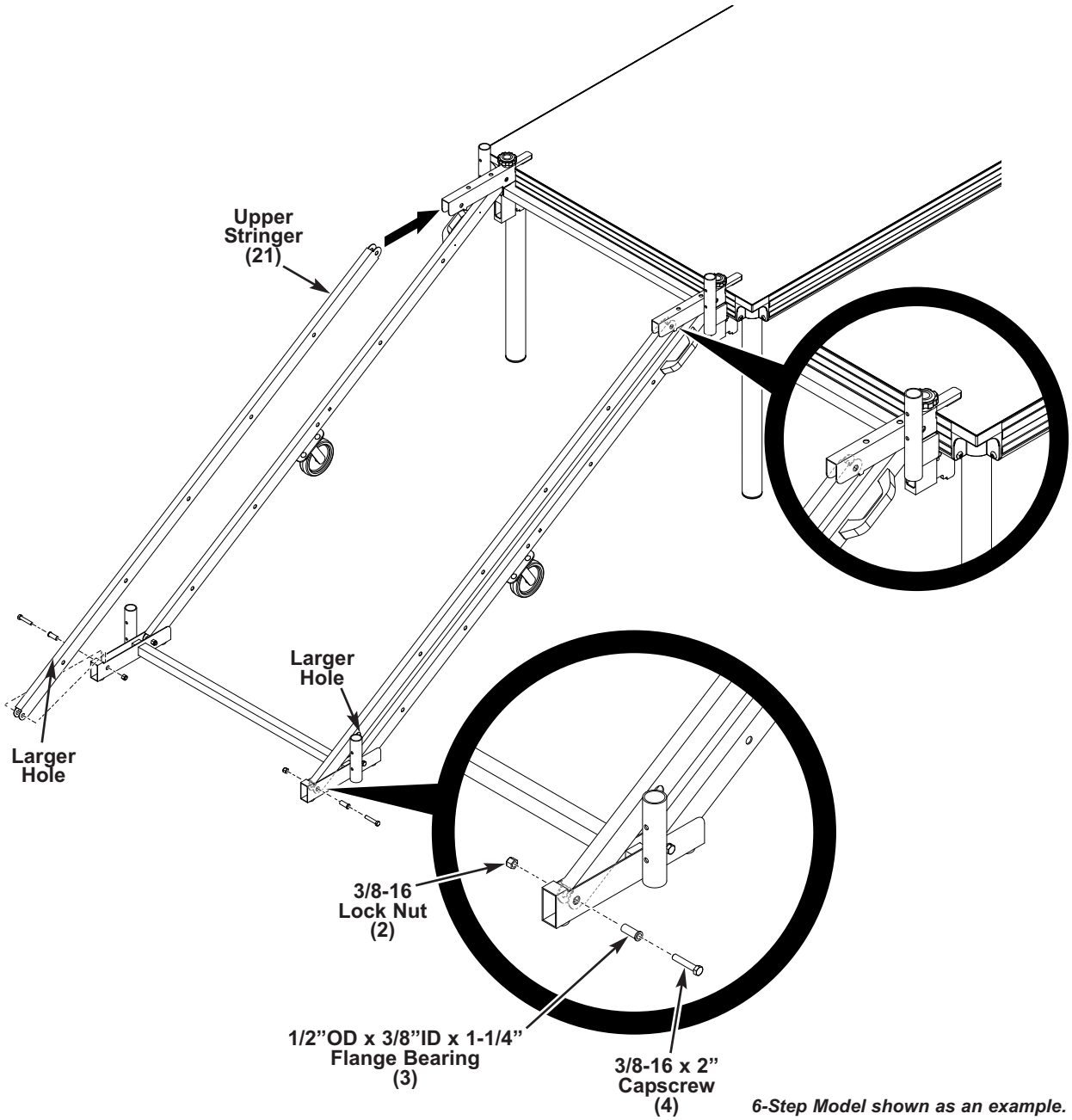

6-Step Model shown as an example.

ASSEMBLY (CONTINUED)

6. Attach a Step Tread (23) to the bottom location.
   a. Align the channels in the bottom of a Step Tread (23) with the bottom available set of drilled holes in both the Upper and Lower Stringers. This will be the larger hole in the Upper Stringer.

   b. Attach the front of the Step Tread using one 3/8-16 x 3” Self-Tapping Screw (8) and one 3/8”OD x 1/2”ID x 1/4” Flange Bearing (3) through the Upper Stringer and into the front channel of the Step Tread as shown.
   An Impact Driver is recommended for attaching Step Treads.

   c. Attach the rear of the Step Tread using one 3/8-16 x 3” Self-Tapping Screw (8) and one 3/8”OD x 1/2”ID x 1-1/4” Flange Bearing (3) through the Upper Stringer and into the front channel of the Step Tread as shown.

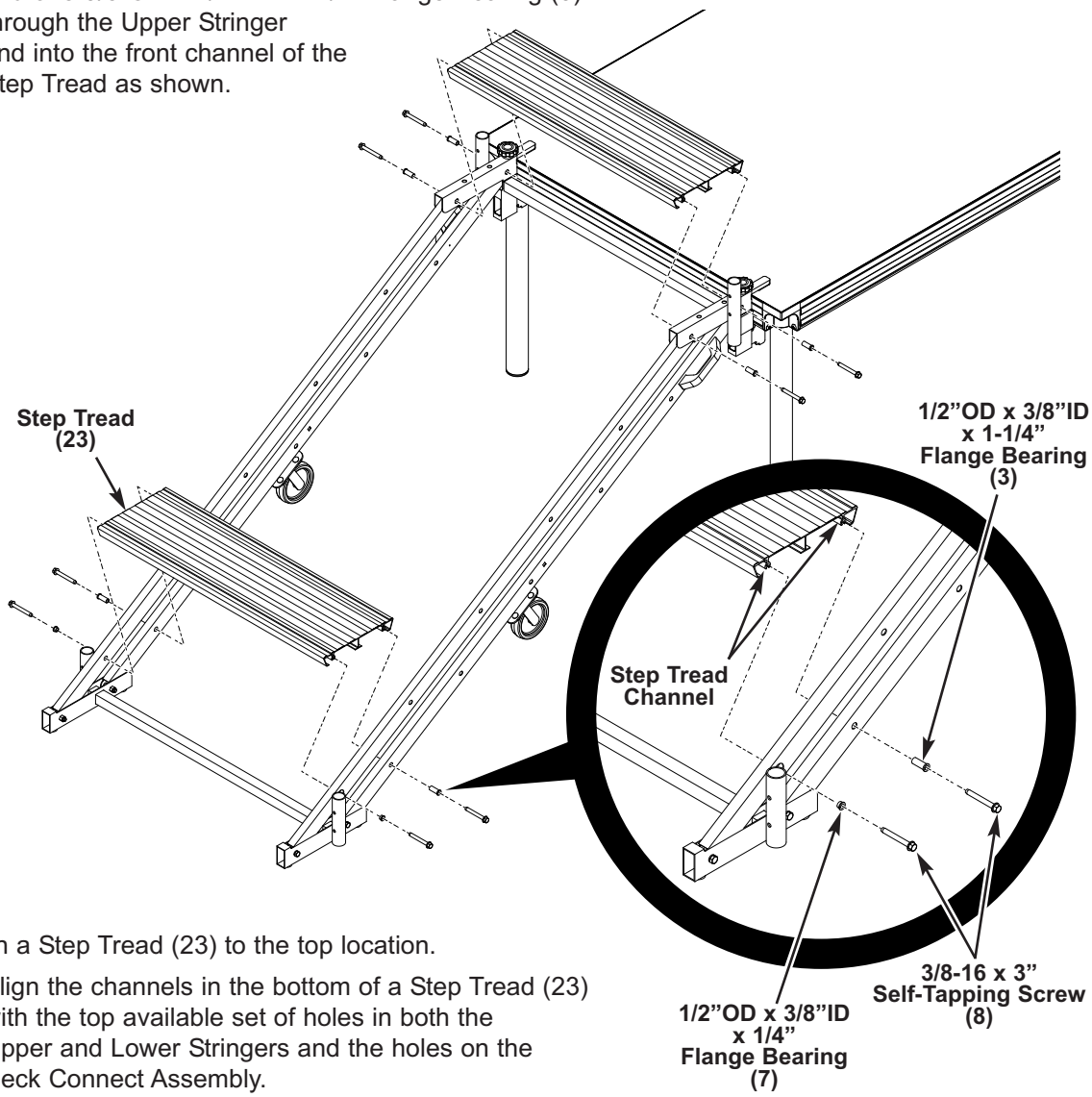

7. Attach a Step Tread (23) to the top location.
   a. Align the channels in the bottom of a Step Tread (23) with the top available set of holes in both the Upper and Lower Stringers and the holes on the Deck Connect Assembly.

   b. Attach the Step Tread using four 3/8-16 x 3” Self-Tapping Screws (8) and four 3/8”OD x 1/2”ID x 1-1/4” Flange Bearings (3) through the Upper/Lower Stringers, Deck Connect Assembly and into the channels of the Step Tread as shown.

Assembly (continued)

8. Attach Step Treads (23) to the remaining locations leaving only the middle location open. Counting up from the bottom Step Tread, the middle location is defined as:

Adjustable Stairway Model	Middle Tread Location	Adjustable Stairway Model	Middle Tread Location
3-Step	2nd	6-Step	4th
4-Step	3rd	8-Step	5th

   a. Align the channels in the bottom of each Step Tread (23) with the matching set of holes in both the Upper and Lower Stringers.

   b. Attach each Step Tread using four 3/8-16 x 3” Self-Tapping Screws (8) and four 3/8”OD x 1/2”ID x 1-1/4” Flange Bearings (3) through the Upper and Lower Stringers and into the channels of the Step Treads as shown.

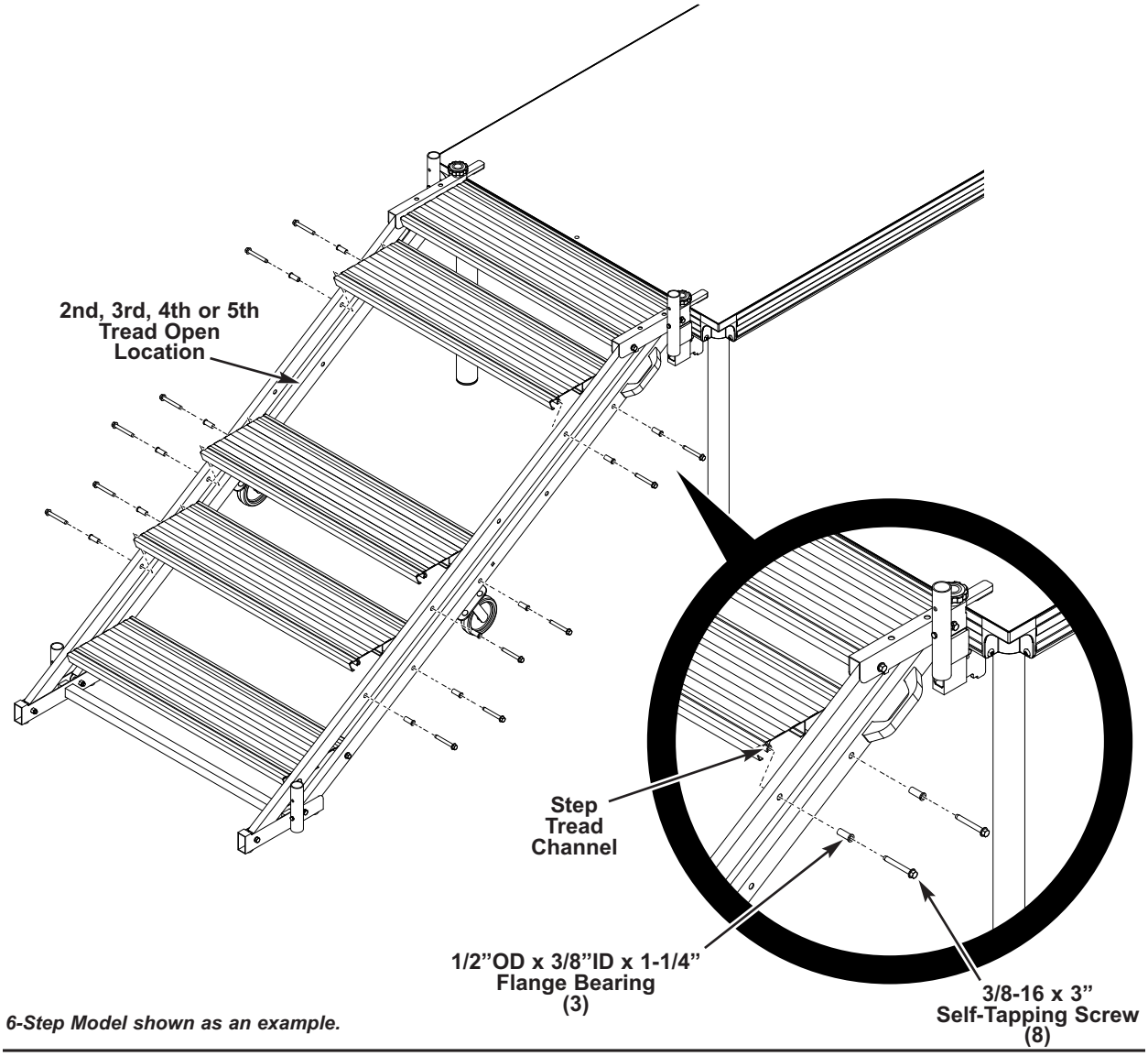

6-Step Model shown as an example.

Assembly (continued)

9. Attach the Pivot Plates (16) and the remaining Step Tread (23).
   a. Attach the remaining Step Tread (23) and one Pivot Plate (16) on both outside surfaces to the open middle location using two 3/8-16 x 3” Self-Tapping Screws (8), two 3/8”ID x 1-1/4”OD Black Washers (14) and two 3/8”OD x 1/2”ID x 1-1/4” Flange Bearings (3) through the Upper and Lower Stringers and into the channels on both sides of the Step Treads as shown.

   b. Attach one Side Adjustment Knob (15) to each Pivot Plate (16) using one 3/8-16 x 2” Carriage Bolt (17), one 3/8”ID x 1-1/4”OD Black Washer (14) and one 3/8”ID Lock Washer (24) through the square hole in each Lower Stringer as shown.

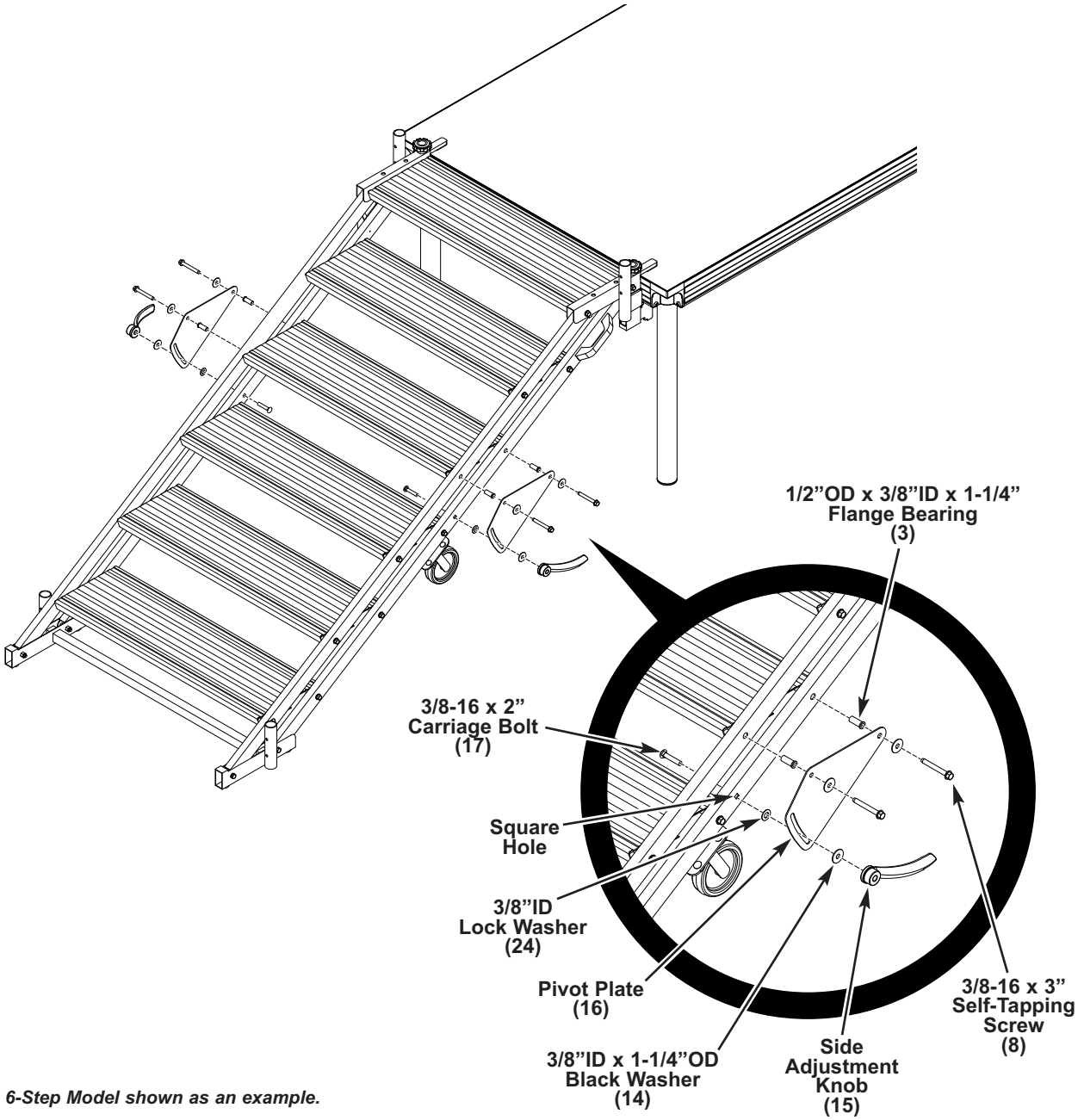

6-Step Model shown as an example.

Assembly (continued)

10. Attach Cover Plates (9) to both sides of the Step Treads.

    The Top Step Tread does not receive Cover Plates.

    Slide a Cover Plate (9) between the end of the Step Treads and the Upper/Lower Stringers on both sides. Fit the cut-outs in each Cover Plate over the installed Flange Bearings.

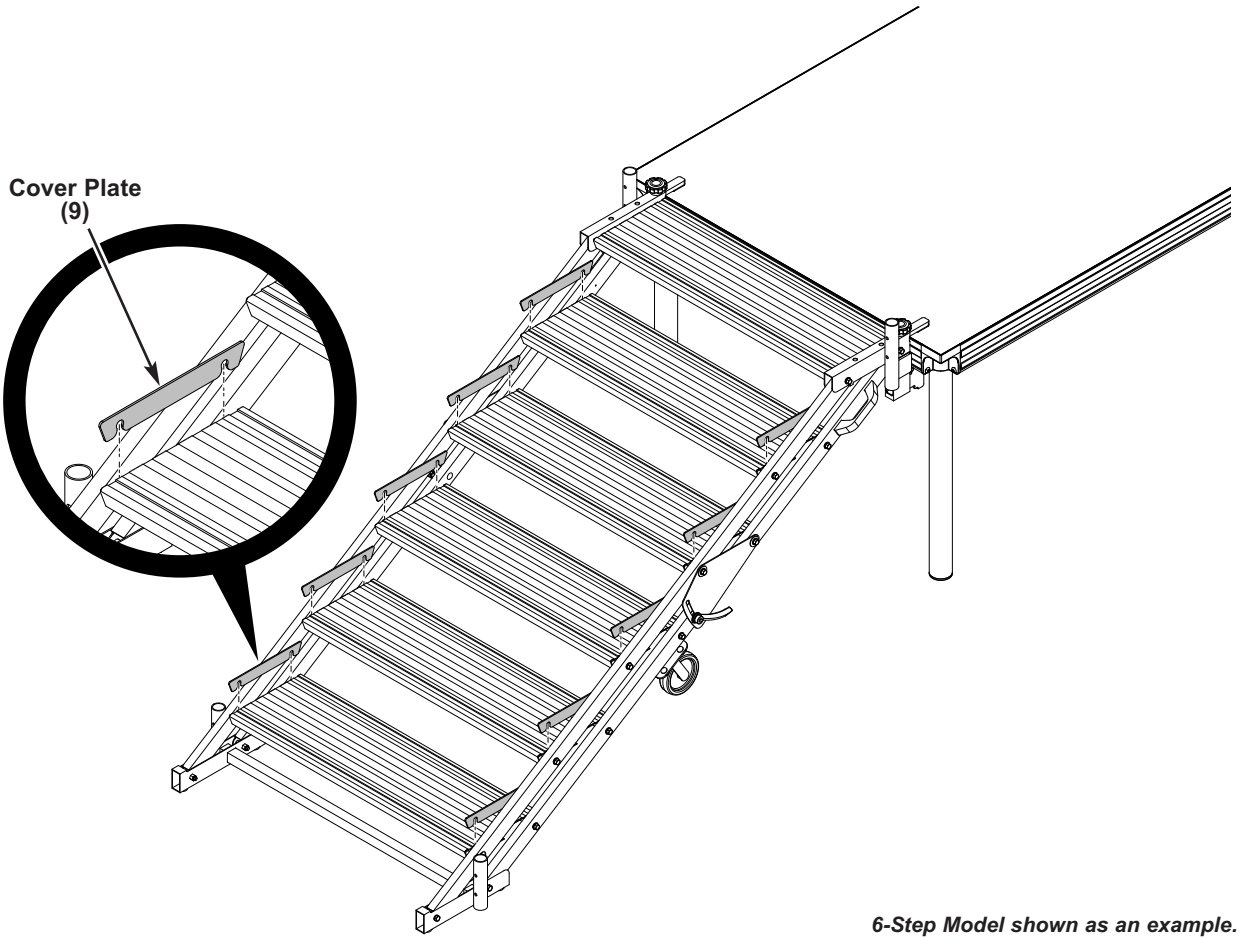

6-Step Model shown as an example.

Assembly (continued)

11. Attach one Rail Assembly (12) to each side of the Stairway.
    a. Fit the Rail Assembly into the cylinders of the Base Assembly and Deck Connect Assembly as shown.

       Push the Rail Assembly down into each cylinder until the pin engages with the top hole.

    b. Optionally, the Rail Assembly can be further secured using one 1/4-20 x 2” Capscrew (5) and one 3/8-16 Lock Nut (6).

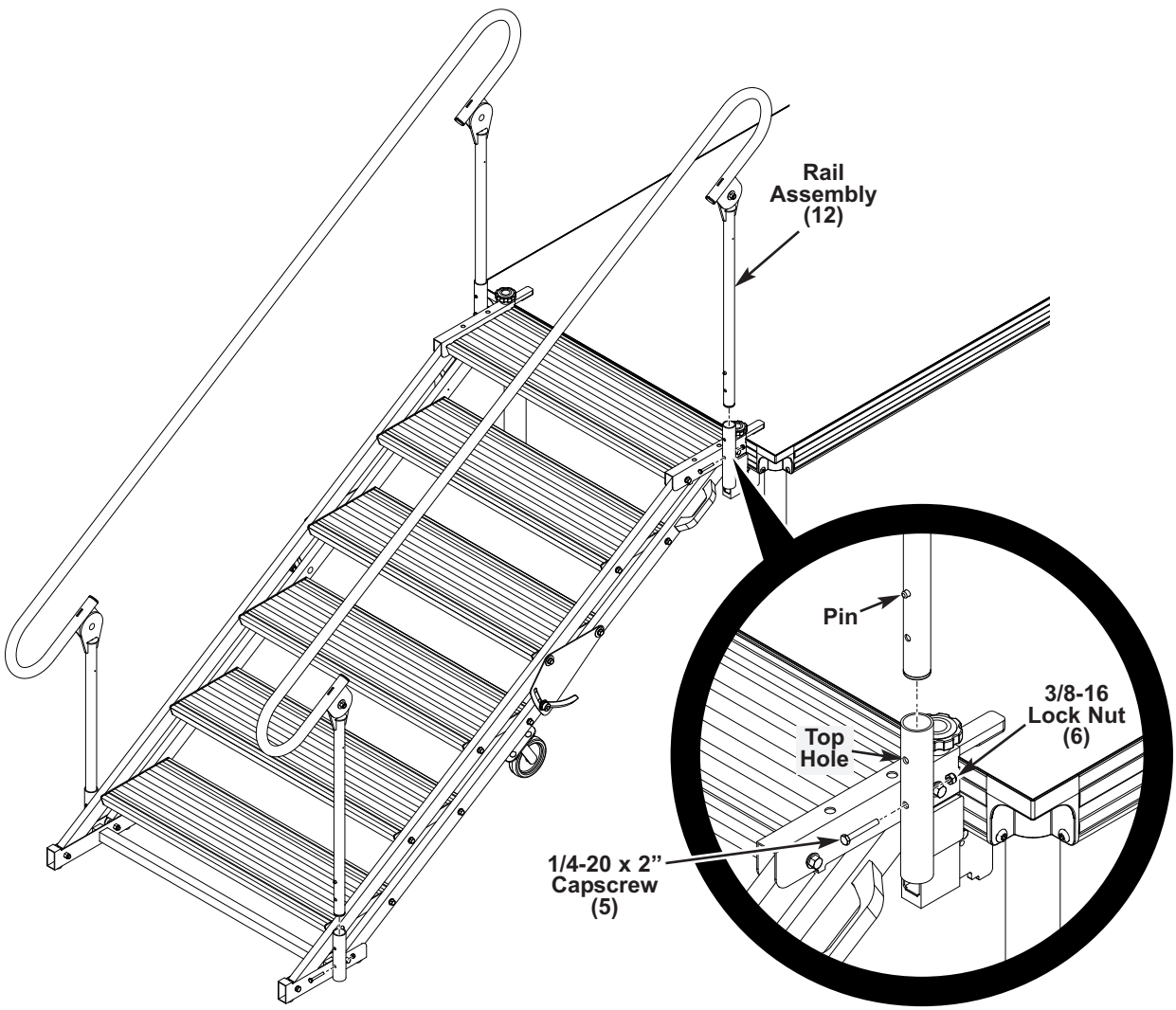

6-Step Model shown as an example.

Installation and Use

To attach an assembled Adjustable Height Stairway to a Wenger staging system:

IMPORTANT: ***The stage deck elevation must fall within the height range of the Adjustable Height Stairway model being attached.***

Adjustable Stairway Model	Minimum Height	Maximum Height
3-Step	12”	24”
4-Step	16”	32”
6-Step	24”	48”
8-Step	32”	64”

1. Be sure that both Connect Brackets are open. This can be adjusted by turning the Handle.

   The Connect Plate can be oriented to fit other Wenger staging systems. See the following page for instruction.

2. Using two people, lift the Adjustable Stairway Connect Brackets to fit over the lip of the stage deck and to rest on the stage deck as shown.

⚠ CAUTION

Two people are required to lift the Adjustable Stairway into position.

⚠ CAUTION

Avoid pinch points by not placing fingers between the Stringers.

3. Tighten the Handle on Both Connect Brackets to secure the Adjustable Stairway into place.

4. Stair Treads can be adjusted to stay parallel with the floor by turning the Side Adjustment Handles.

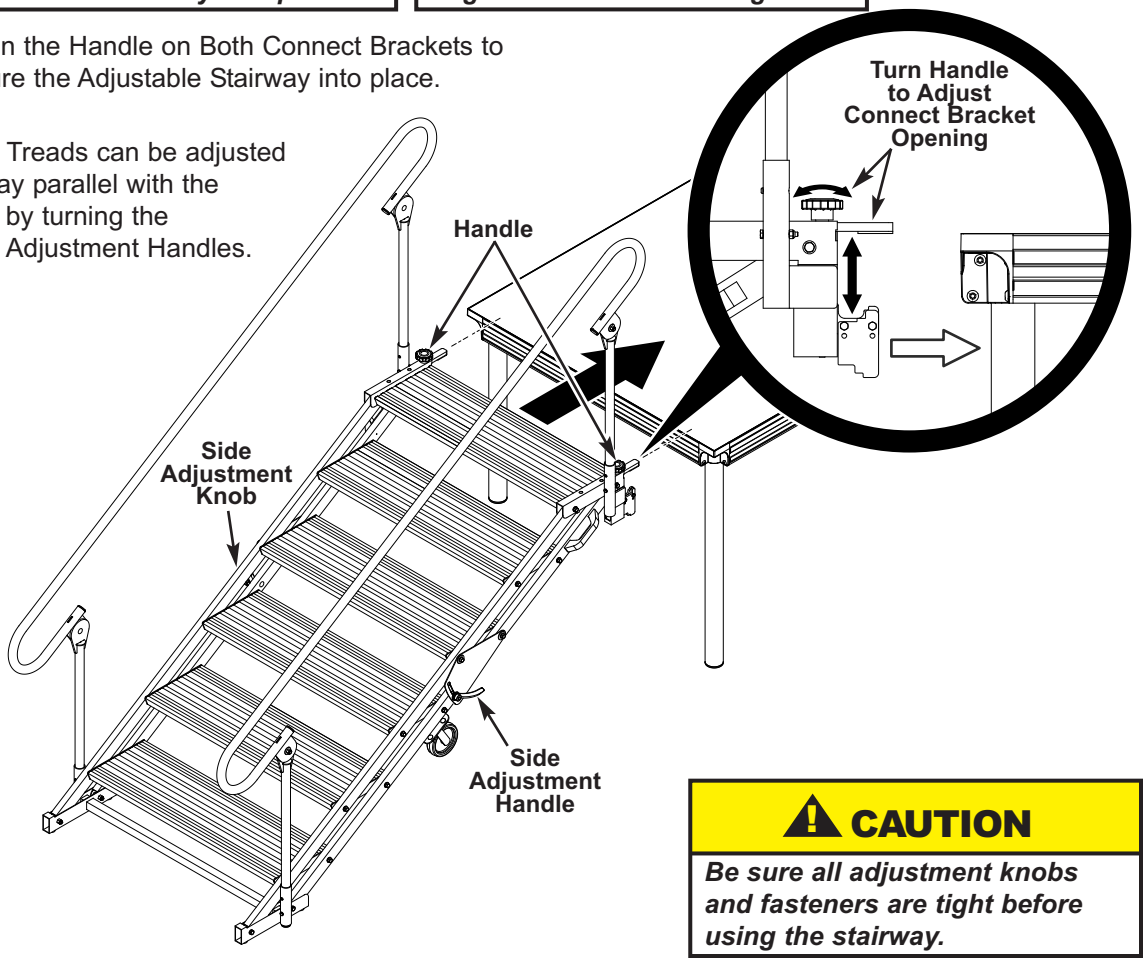

⚠ CAUTION

Be sure all adjustment knobs and fasteners are tight before using the stairway.

Deck Connect Orientation

The Adjustable Height Starway is designed to for use with many Wenger stage systems.

1. Depending on the stage system, the Deck Connect Plate must be oriented to attach to the stairway.

2. Remove the two 1/4-20 x 7/8” Capscrews and 1/4-20 Lock Nuts securing each Deck Connect Plate.

3. Orient the Deck Connect Plate according to the type of stage being used as referenced below and re-attach the fasteners.

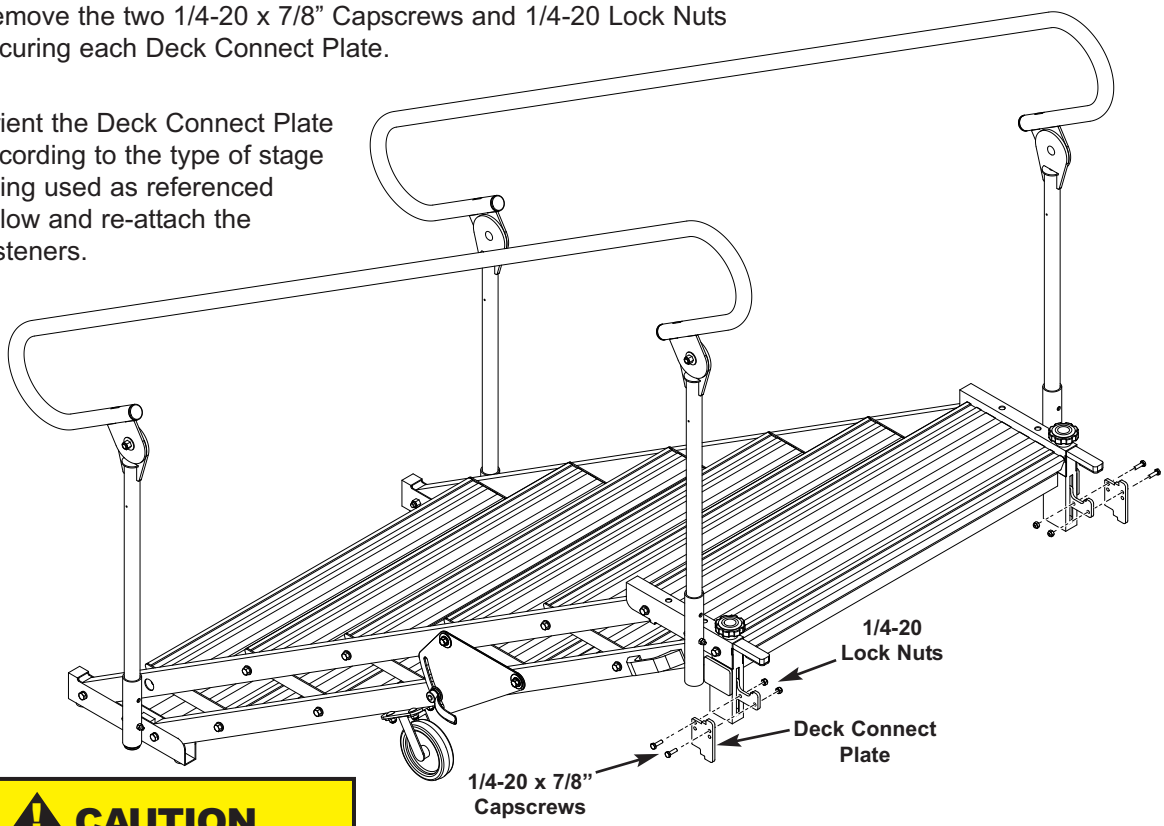

⚠ CAUTION

Be sure the orientation of both Deck Connect Plates are correct for the stage type and that they both fully engage with the stage deck before using the stairway.

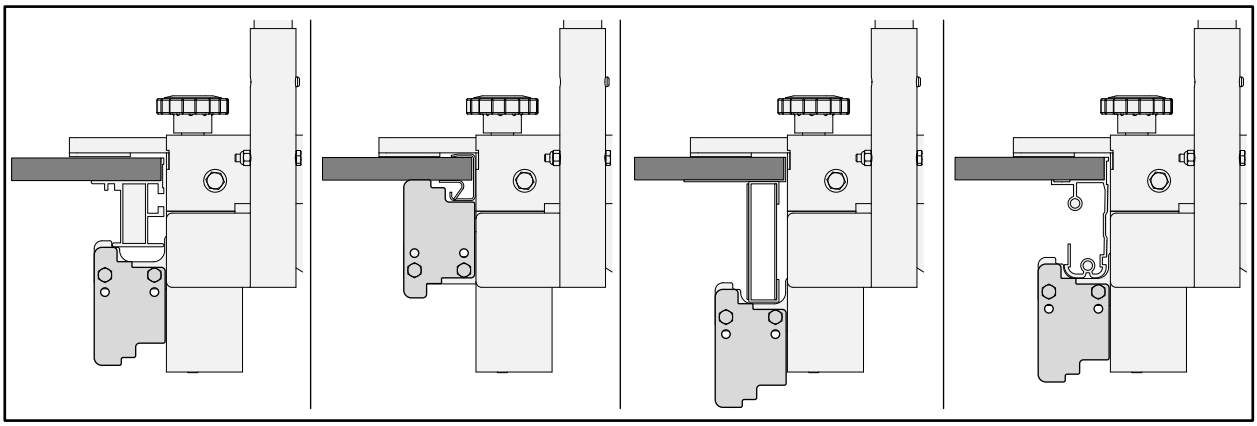

Versalite® Connect Plate Orientation	Trouper® Connect Plate Orientation	Showmaster® Connect Plate Orientation	StageTek™ Connect Plate Orientation